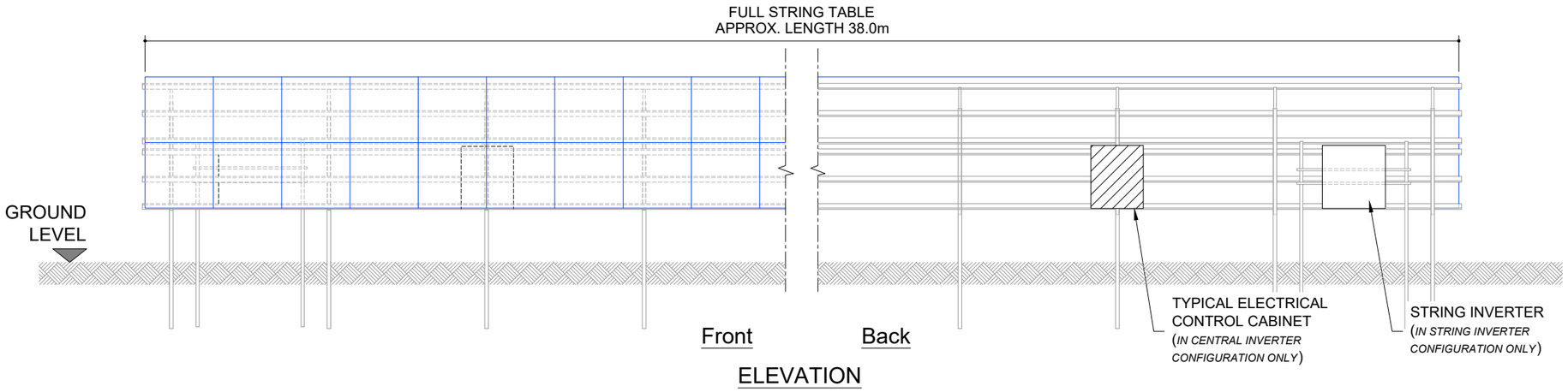

ELEVATION

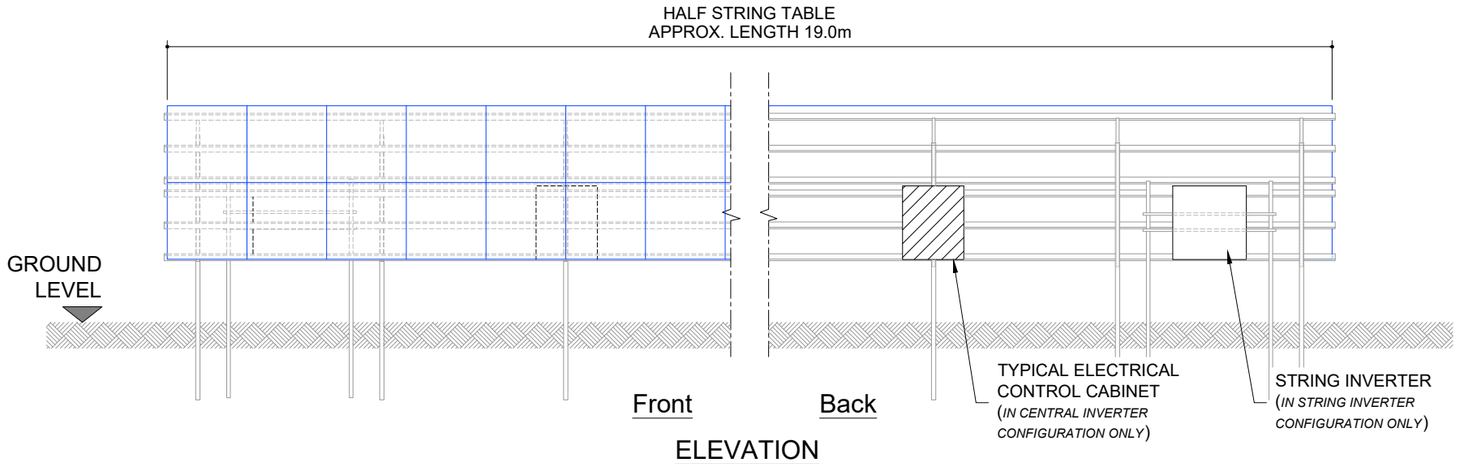

ELEVATION

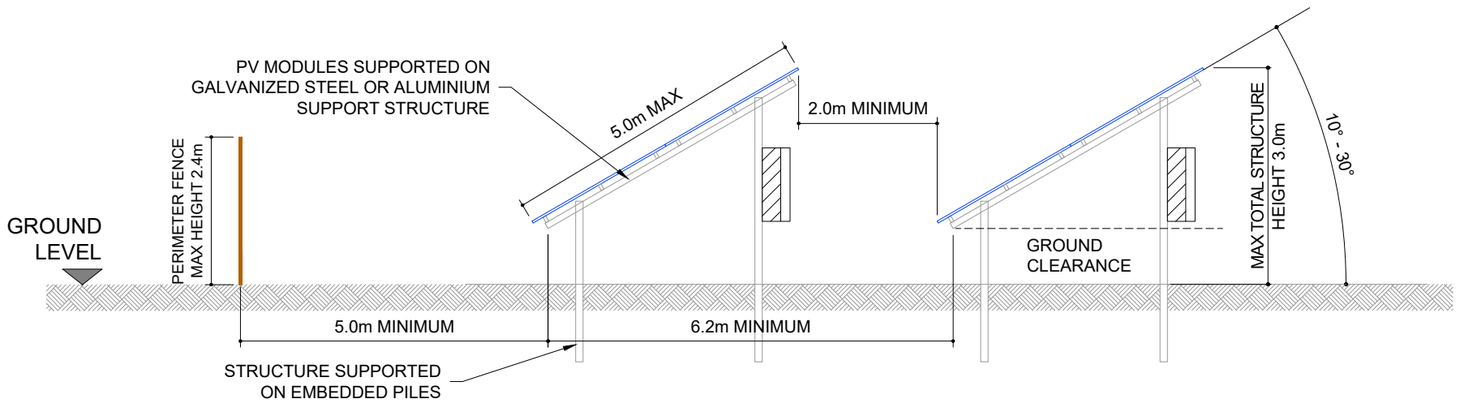

SIDE ELEVATION

NOTES:

1. ALL DIMENSIONS ARE SUBJECT TO DETAILED DESIGN.
2. GROUND CLEARANCE WILL VARY AS REQUIRED ACCORDING TO TOPOGRAPHY AND MODULE CONFIGURATION.
3. THE PILE DEPTH SHALL BE DETERMINED FOLLOWING DETAILED GEOTECHNICAL SITE INVESTIGATION AND WILL TYPICALLY BE 1.5 - 1.7m. HOWEVER THE MAXIMUM DEPTH COULD BE UPTO 2.4m.
4. PV MODULES ARE SHOWN IN ELEVATION VIEW INSTALLED IN PORTRAIT, ALTHOUGH THEY MAY BE INSTALLED IN LANDSCAPE TO SUIT SITE CONDITIONS.
5. STRING INVERTER ONLY ON SELECTED LOCATIONS SUBJECT TO DETAILED DESIGN.

PILLED
SHEET 1 OF 2

0 1 2 3 4 5m

SCALE 1:100

ISSUE	DRAWN	CHKD	APPD	DATE	REVISION NOTES
1	FG	DC	CC	2025-05-02	First issue

PURPOSE: PERMITTING	COORDINATES: N/A
SCALE: 1:100 @A3	DATUM: N/A
LAYOUT DRAWING: N/A	T-LAYOUT NO: N/A

PROJECT TITLE
STEEPLE RENEWABLES PROJECT
EN010163

DRAWING TITLE
2.8 - TYPICAL PV MODULE RACK DETAIL
APFP REG 5(2)(O)

RES DRAWING NUMBER: 04954-RES-SOL-DR-PT-001
REV: 1

THIS DRAWING IS THE PROPERTY OF RENEWABLE ENERGY SYSTEMS LIMITED AND NO REPRODUCTION MAY BE MADE IN WHOLE OR IN PART WITHOUT PERMISSION

BEAUFORT COURT,
EGG FARM LANE,
KINGS LANGLEY,
HERTS WD4 8LR. UK
TEL +44 (0) 1923 299200
WWW.RES-GROUP.COM

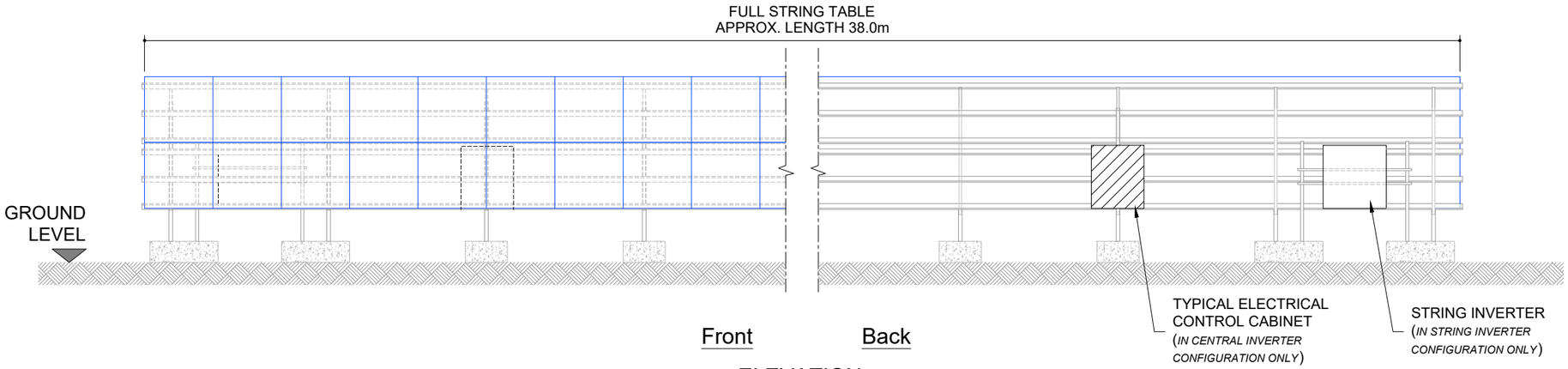

ELEVATION

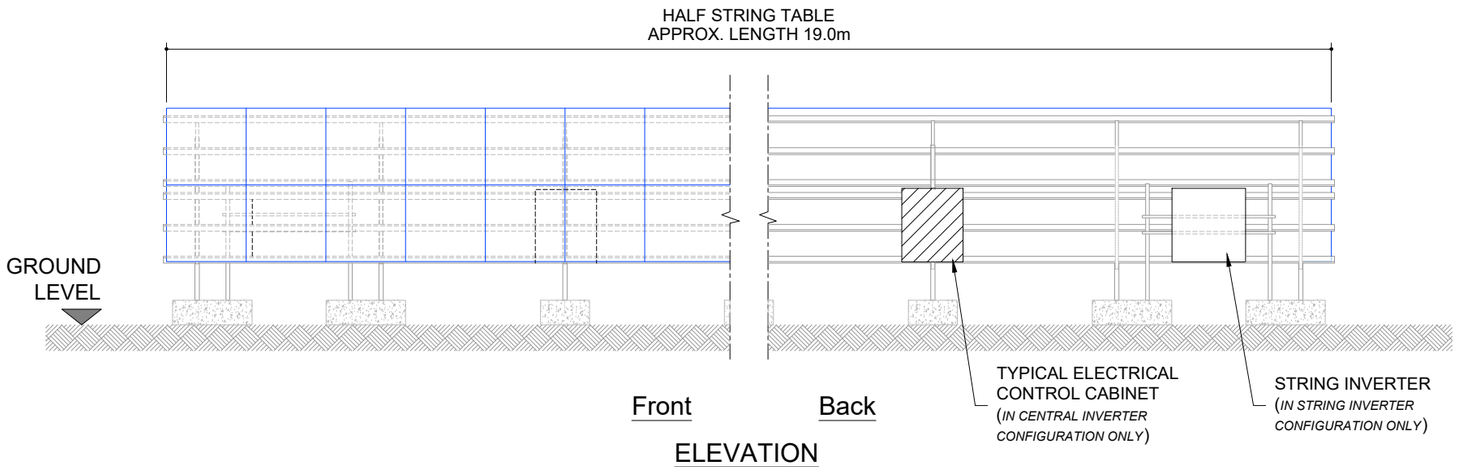

ELEVATION

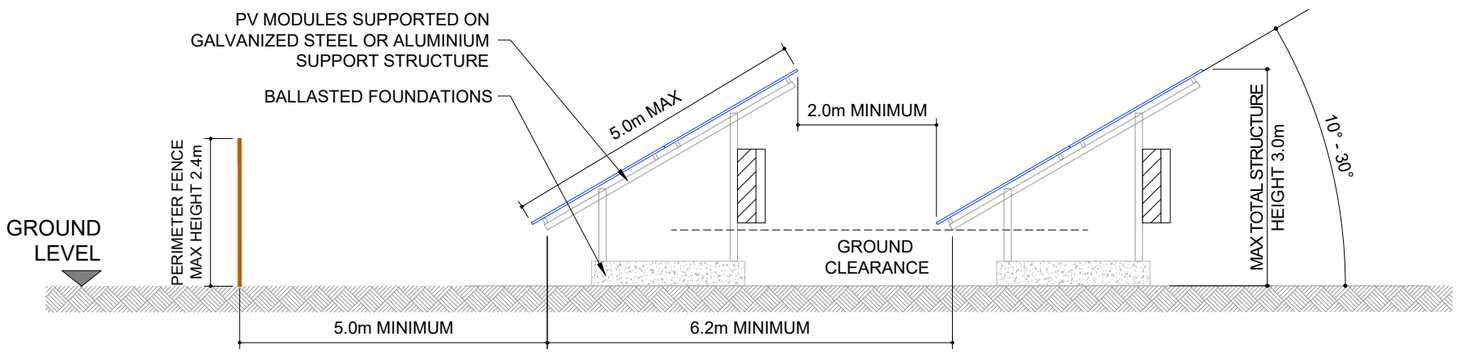

SIDE ELEVATION

NOTES:

1. ALL DIMENSIONS ARE SUBJECT TO DETAILED DESIGN.
2. GROUND CLEARANCE WILL VARY AS REQUIRED ACCORDING TO TOPOGRAPHY AND MODULE CONFIGURATION.
3. PV MODULES ARE SHOWN IN ELEVATION VIEW INSTALLED IN LANDSCAPE, ALTHOUGH THEY MAY BE INSTALLED IN PORTRAIT TO SUIT SITE CONDITIONS.
4. SUPPORT FRAME IS CONNECTED DIRECTLY TO THE BALLASTED FOUNDATION.
5. STRING INVERTER ONLY ON SELECTED LOCATIONS SUBJECT TO DETAILED DESIGN

BALLASTED
SHEET 2 OF 2

0 1 2 3 4 5m

SCALE 1:100

ISSUE	DRAWN	CHKD	APPD	DATE	REVISION NOTES
1	FG	DC	CC	2025-05-02	First issue

PURPOSE: PERMITTING	COORDINATES: N/A
SCALE: 1:100 @A3	DATUM: N/A
LAYOUT DRAWING: N/A	T-LAYOUT NO: N/A

PROJECT TITLE
STEEPLE RENEWABLES PROJECT
EN010163

DRAWING TITLE
2.8 - TYPICAL PV MODULE RACK DETAIL
APFP REG 5(2)(O)

RES DRAWING NUMBER: 04954-RES-SOL-DR-PT-001
REV: 1

THIS DRAWING IS THE PROPERTY OF RENEWABLE ENERGY SYSTEMS LIMITED AND NO REPRODUCTION MAY BE MADE IN WHOLE OR IN PART WITHOUT PERMISSION

BEAUFORT COURT,
EGG FARM LANE,
KINGS LANGLEY,
HERTS WD4 8LR, UK
TEL +44 (0) 1923 299200
WWW.RES-GROUP.COM